User Guide

Honeywell

SolarPak

© Copyright 2012 Honeywell Analytics

Contents

1 Warnings ... 3
1.1 SolarPak Marking ... 3
1.2 Operation Area and Conditions ... 4
1.3 Instruction For Safe Use ... 4
1.4 Use In Hazardous Areas ... 4
1.5 Specifications ... 4
2 Overview ... 5
3 SolarPak Mounting Assembly Installation ... 6
4 Installation ... 6
4.1 Solar Panel Mounting Preparation ... 6
5 Mounting The Completed Assembly ... 7
5.1 Wall mounting ... 7
5.2 Pole Mounting ... 8
5.3 Solar Panel Tilt Angle Adjustment ... 10
5.3.1 Solar Panel Orientation ... 11
5.3.2 Solar Panel Tilt ... 12
5.3.3 Maximizing Total Yearly Energy Production ... 13
5.3.4 Maximizing Energy Production In The Winter ... 14
5.3.5 Maximizing Energy Production In The Summer ... 14
5.3.6 System Run Time ... 14
5.3.7 PowerPak Run Time Without A Solar Charger ... 14
5.3.8 Expected Daily Consumption ... 15
5.3.9 Expected Daily Production ... 15
5.3.10 U.S. Peak Sun Hours By Location ... 16
5.3.11 International Peak Sun Hours By Location ... 17
5.3.12 Calculating Expected Run Time ... 19
6 Electrical Connections With FTB1000 PowerPak ... 20
7 Starting & Testing The System ... 21
8 Disconnecting The SolarPak System ... 21
9 Troubleshooting ... 22
10 Replacement Parts ... 22
10.1 LED Displays ... 22
10.2 LED Status Indicator ... 23
10.3 LEDs And Troubleshooting ... 23
11 Honeywell Analytics Contacts ... Error! Bookmark not defined.

Proper Product Disposal At End Of Life

The WEEE symbol (crossed-out wheeled bin) indicates separate collection of waste electrical and electronic equipment in EU countries.

At the end of its life, this product must undergo separate collection and recycling from general or household waste. Please use the return and collection system available in your country for disposal of this product.

1 Warnings

Warning:

This instrument has not been tested in an explosive gas/air atmosphere having an oxygen concentration greater than 21%. Substitution of components may impair suitability for intrinsic safety.

1.1 SolarPak Marking

The SolarPak made by RAE Systems is certified according to the IECEx scheme, ATEX and CSA for US and Canada as protected by intrinsic safety.

The product is marked with the following information:

RAE SYSTEMS
3775 N. 1st. St., San Jose
CA 95134, USA
RAE SolarPak
Type FTS-20.
Serial No/barcode: XXX-XXXX

IECEx DNV 11.0007 Ex ia IIC T4 Ga	CE 0575 Ex II 1G Ex ia IIC T4 Ga DNV 11 ATEX 98773	C US 11.2440615 Exia Class I,Div 1, Groups A,B,C,D T4

Intrinsically safe entity parameters:

Power output, Pin1	CTL, Pin 2
Io: 3.23A	Io: 23mA
Lo: 3.2uH	Lo: 66mH
Co: 3uF	Co: 3uF
Uo: 9.96V	Uo: 9.56V
Po: 8.03W	Po: 12mW

-40º C < Tamb < +60º C

WARNING: Read User's Manual for Intrinsic Safety Precautions

WARNING: EXPLOSION HAZARD - SUBSTITUTION OF COMPONENTS MAY IMPAIR INTRINSIC SAFETY.

WARNING: TO PREVENT THE IGNITION OF EXPLOSIVE ATMOSPHERE, DISCONNECT POWER BEFORE SERVICING.

1.2 Operation Area and Conditions

Hazardous Areas classified by Zones

SolarPak is intended to be used in hazardous areas classified for zone 0, zone 1 or zone 2, within the temperature range of -40º C to +60º C, where gases of explosion groups IIA, IIB or IIC and T4 may be present.

Hazardous Areas classified by Divisions

SolarPak is intended to be used in hazardous areas classified for Class I Div. 1 or 2, within the temperature range of -40º C to +60º C, where gases of explosion groups A, B, C or D and temperature class T4 may be present.

1.3 Instruction For Safe Use

The SolarPak can be applied as charger for intrinsically safe equipment in hazardous areas, providing that connected equipment complies with the intrinsically safe input entity parameters.

The SolarPak can be connected and disconnected inside the hazardous area.

The connected intrinsically equipment must have fitting intrinsically safe entity parameters

1.4 Use In Hazardous Areas

Equipment which is intended for use in explosive atmospheres and which has been assessed and certified according to international regulations may be used only under specified conditions. The components may not be modified in any way.

The appropriate regulations for service and repair must be properly observed during such activities.

1.5 Specifications

Length: 650mm (25.6″)
Width: 335mm (13.2″)
Thickness: 40mm (1.6″)
Weight (panel only): 4.6 kg (10.14 lbs)
Weight (panel + adjustable pole mount): 7.6 kg (16.75 lbs)
Cable length: 5m/16′
Maximum Voltage (full sun): 9.96V
Maximum Current (full sun): 700mA
Certification:

IECEx DNV 11.0007 Ex ia IIC T4 Ga	CE 0575 Ex II 1G Ex ia IIC T4 Ga DNV 11 ATEX 98773	C US 11.2440615 Exia Class I,Div 1, Groups A,B,C,D T4

Intrinsically safe entity parameters:

Power output, Pin1	CTL, Pin 2
Io: 3.23A	Io: 23mA
Lo: 3.2uH	Lo: 66mH
Co: 3uF	Co: 3uF
Uo: 9.96V	Uo: 9.56V
Po: 8.03W	Po: 12mW

-40º C < Tamb < +60º C

2 Overview

The SolarPak has been designed for easy assembly and installation, and most portions of the assembly are done before the SolarPak is shipped. The complete assembled system is shown below, along with a FTB-1000 RAE PowerPak and MeshGuard monitor. Pole and wall mounting instructions are included in this guide.

SolarPak

MeshGuard

RAE PowerPak

3 SolarPak Mounting Assembly Installation

The SolarPak operates most effectively when it is installed and adjusted for maximum sun exposure for the greatest amount of time per day. This requires checking the angle relative to the sun and the orientation relative to its geographic location (for true north or true south exposure). A computer, a magnetic compass, and a mechanical (drawing) compass will help you during installation.

4 Installation

The SolarPak's solar panel is set inside a metal frame. On the back of the frame is the junction box with a cable that attaches to a FTB-1000 RAE PowerPak. Attached to the frame is an adjustable mounting system that attaches to a bracket for wall mounting or pole mounting.

4.1 Solar Panel Mounting Preparation

1. Remove the solar panel and place it face-down on a soft surface (cloth, carpeting, etc.).
2. Remove the pole-mounting assembly.
3. Loosen the screws holding the two arms to the brackets on the back of the solar panel, as well as the two extra screws.
4. Remove the screw, washer, and nut at the end of each bracket, as well as the two extra screws, and raise the two arms.
5. Line up the holes of the pole-mounting assembly with the holes at the ends of the two arms and insert the hex screws. Slip washers and nuts over the ends of those four screws.
6. Tighten all six screws with your fingers. Do not tighten them too much, since you will perform adjustments when the SolarPak is attached to a wall or pole.

Slide the assembly and arms to make sure the arms move freely. Then follow the instructions in the next section, Mounting The Completed Assembly.

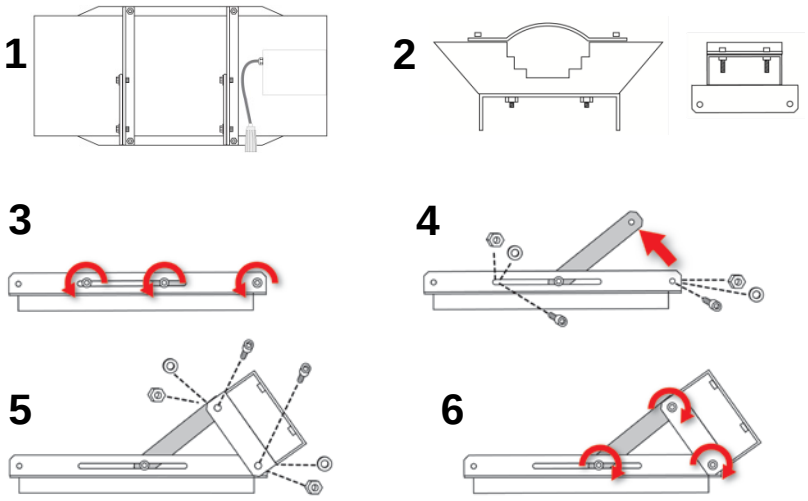

5 Mounting The Completed Assembly

The completed SolarPak assembly may be placed on top of any stable platform, wall-mounted, or pole-mounted. All parts required for wall-mounting or pole-mounting are included.

5.1 Wall mounting

1. Find the best location on a strong wall that can support the weight of the SolarPak.
2. Mark and drill holes in the wall to accommodate screws to hold the mounting plate.
3. If necessary, install anchors (if the SolarPak is to be fastened to a masonry or brick wall).
4. Fasten the wall/pole mounting plate to the wall with four screws through the round holes at the left and right edges of the mounting plate (see below).

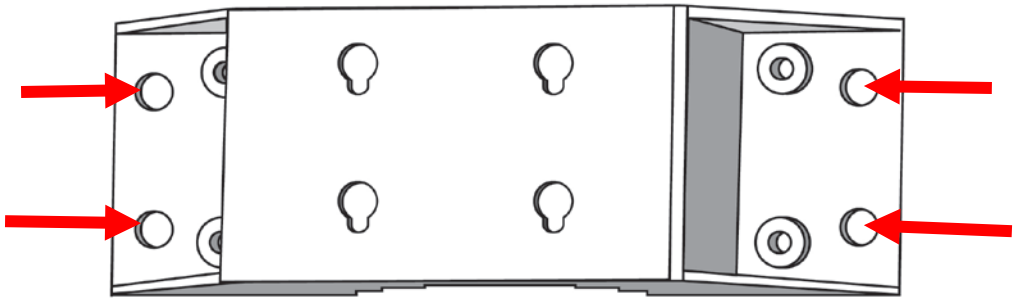

Insert four M10 screws through the outer four holes to fasten the wall/pole mounting plate.

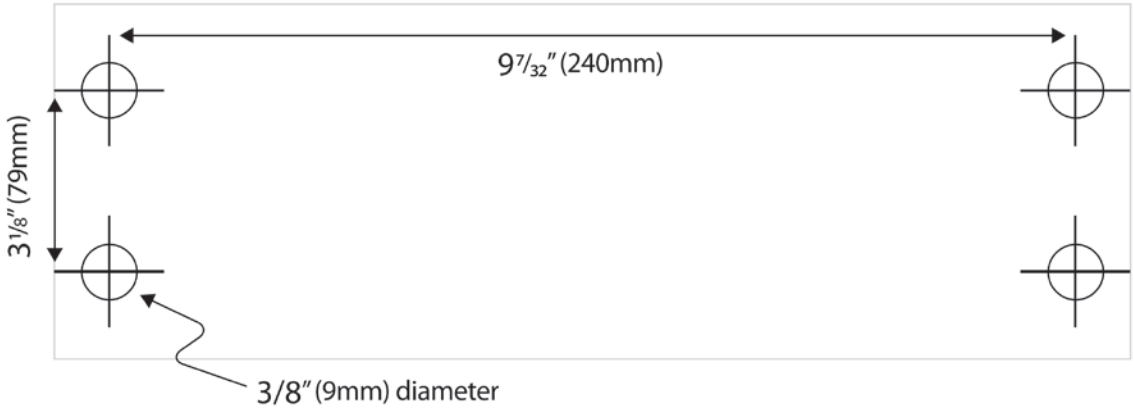

Drilling chart for the wall/pole mounting plate.

5.2 Pole Mounting

The pole-mountable bracket is designed for small-diameter poles (2" to 3.5"/50 mm to 89 mm).

1. Place one pole-mount bracket against the pole and one wall/pole-mount plate on the other side of the pole.

   Note: The height of the bracket and mounting plate should be set so that the SolarPak assembly is at the desired height when the heads of the top four M6 screws on the backside of the enclosure are inserted into the corresponding keyholes on the mounting plate.

2. Slide a spring washer and steel washer onto each of the M8*8 bolts. Tightly fasten the bracket to the mounting plate with four M8*80 bolts.
3. Adjust the height of the bracket and mount plate to align with the bottom four M6 screws on the back of the enclosure.
4. Support the weight of the SolarPak assembly and insert the top set of four M6 screws on its backside through the corresponding holes on the top wall/pole-mounting plate.
5. Do the same for the bottom set of four M6 screws.

Note: Ensure the M6 screws are firmly inserted in each hanging notch before letting the wall/pole mounting plate fully bear the weight of the SolarPak assembly.

Pole Mounting Bracket

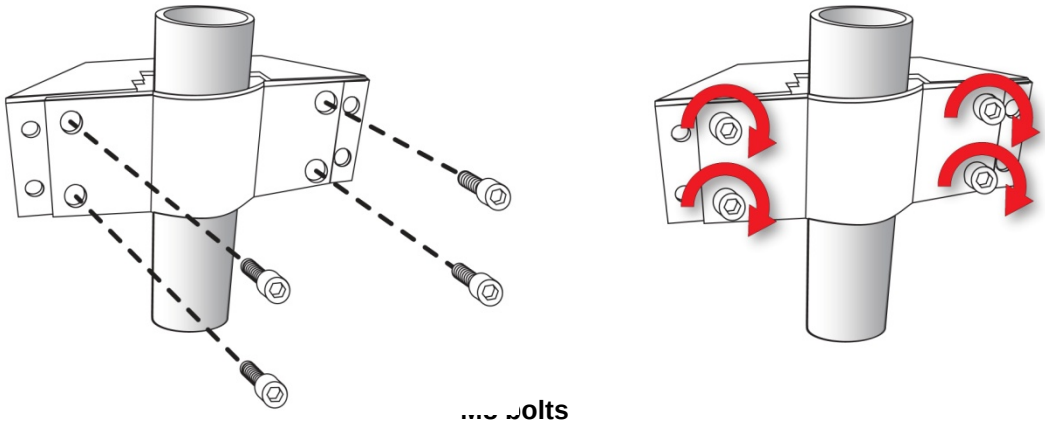

...6 bolts

Here is a side view of how the pole-mounting bracket is attached to a pole:

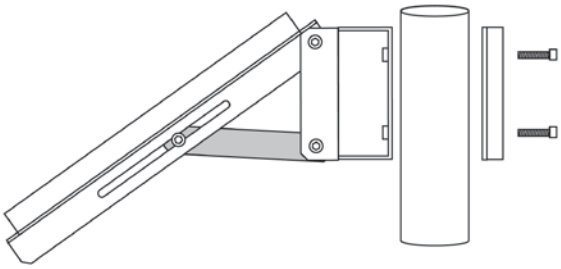

Align the bracket's two parts with the pole.

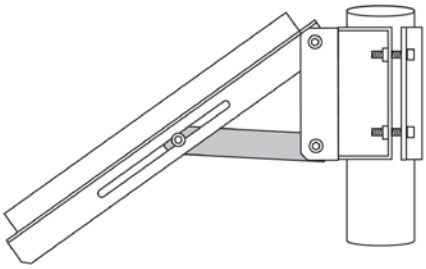

Tighten the two screws until the unit is snug

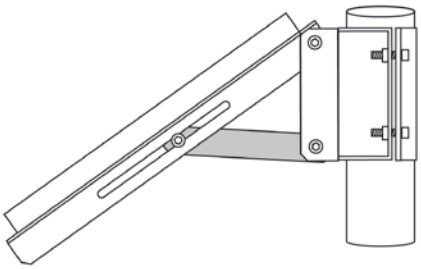

After the SolarPak is at its correct height and its north/south alignment is set, fully tighten the screws with the hex wrench.

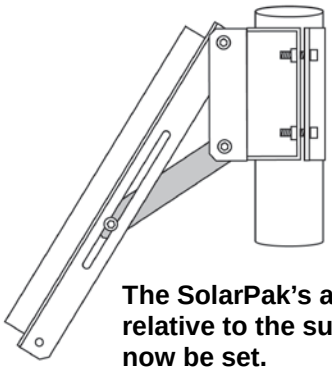

The SolarPak's angle relative to the sun can now be set.

Initially tighten the screws so that the parts are snug but moveable. This will make it easier to adjust the SolarPak's north/south alignment and the solar panel's angle.

5.3 Solar Panel Tilt Angle Adjustment

1. Loosen the top screws on the two steel support bars (shown below) of the SolarPak mounting assembly.
2. Slide the top of the bars into the desired position and retighten the top screws.

If desired, the solar panel's tilt angle can be adjusted each season to get the best angle for that season and optimize output from the solar panel. During the spring and autumn equinoxes, the best angle is equal to the latitude.

Winter: The best tilt angle is the latitude plus 15 degrees in the Northern Hemisphere (minus 15 degrees in the Southern Hemisphere).

Summer: The best tilt angle is the latitude minus 15 degrees in the Northern Hemisphere (plus 15 degrees in the Southern Hemisphere).

If it is preferable to leave the panel in a fixed position throughout the year, select the best winter angle to even out seasonal performance.

Important! In order to optimize your SolarPak's efficiency, refer to Solar Panel Orientation, page 11, for instructions on calculating the correct angles for your location.

If mounting on a pole, set the directional orientation first, by turning the panel side to side. Then lock the screws.

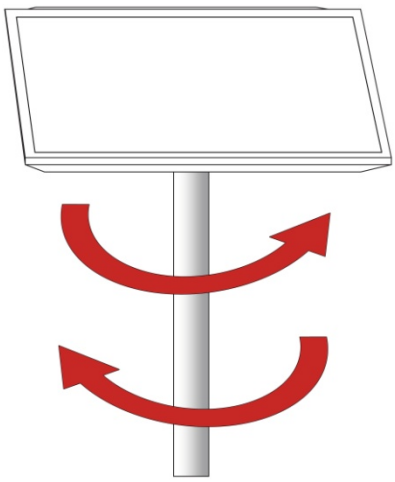

Note: If the SolarPak is not mounted on a pole, try to face it as close to true south as possible.

Set the panel's orientation relative to the sun by following instructions in the next section. Whether it is mounted on a pole or on a wall, the procedure is the same. Make sure the screws on both sides are loose enough to allow setting the angle, but tight enough so that the solar panel does not simply drop to a vertical orientation. Once the panel's angle is set, then tighten up the three screws on each side.

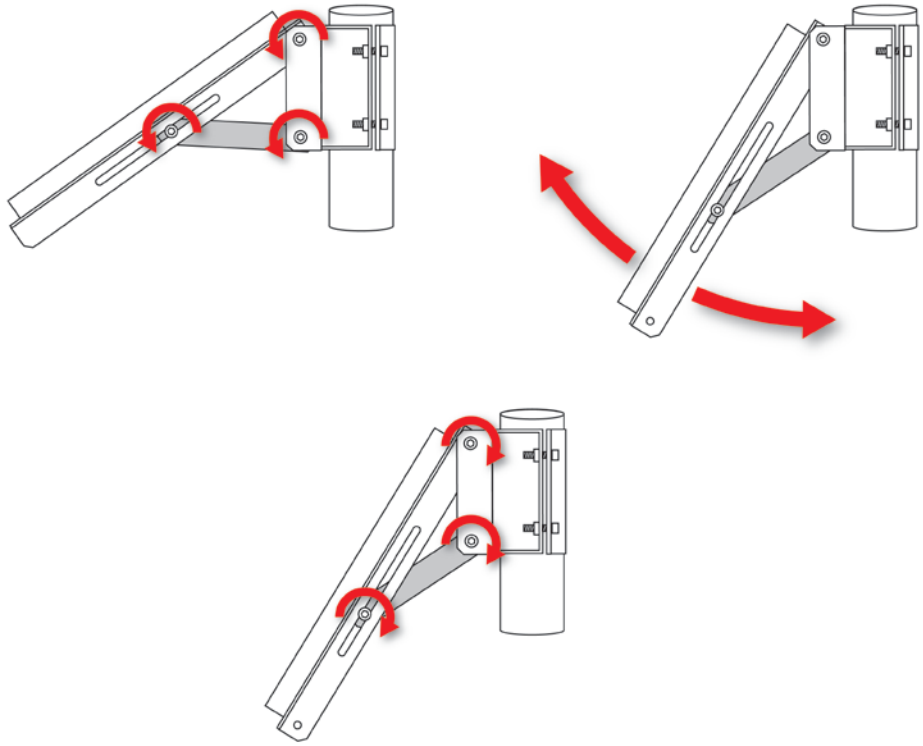

5.3.1 Solar Panel Orientation

To maximize the charging capability of the SolarPak, it is important to adjust the orientation of the solar panel based on your location.

For locations in the Northern Hemisphere, solar panels should be oriented to face true south. In the Southern Hemisphere, solar panels should be oriented to face true north. If you are using a magnetic compass to determine direction at the solar panel's installation site, you need to take into account *magnetic declination*. A magnetic compass points to *magnetic* north, rather than *true* north. The difference between magnetic and true north is the magnetic declination, and it varies by location.

For example: San Jose, California, has a magnetic declination of 17° east. When using a magnetic compass, you would find magnetic north and then rotate counterclockwise by 17 degrees to find true north. (A western declination value would rotate true north clockwise from magnetic north.)

An example of worldwide magnetic declination values is shown below. For more accurate magnetic declination values, we recommend that you perform an internet search for "magnetic declination" followed by the city and country that you are in.

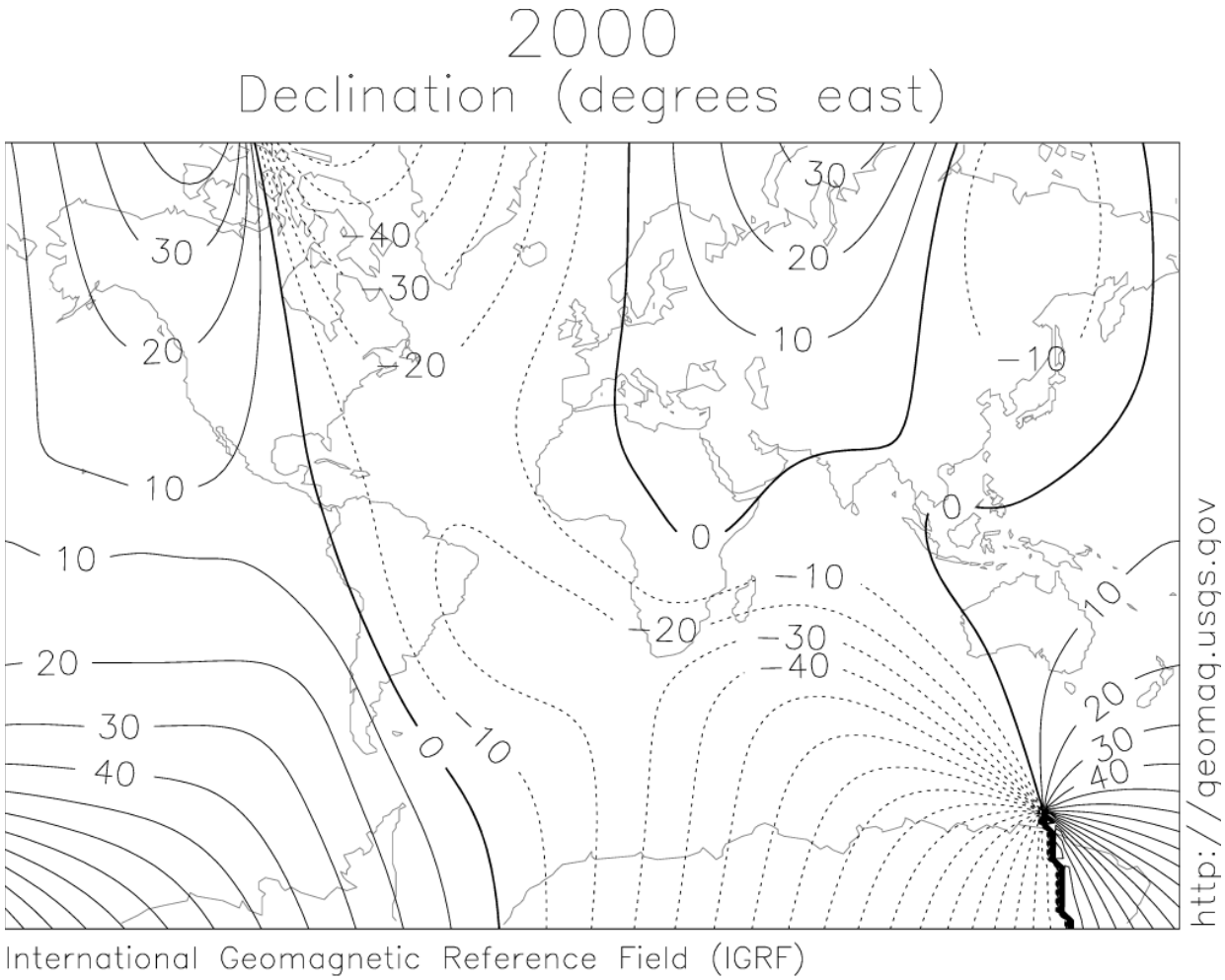

5.3.2 Solar Panel Tilt

The sun's path over a particular location varies throughout the year. In the summer months, the sun is higher in the sky, while in the winter it is lower. Solar panels produce the most energy when the sun's rays are perpendicular (at a 90° orientation) to the panel. For this reason, it is important to tilt the solar panels to the appropriate angle to maximize the energy produced.

Ideally, the face of the solar panel would be pointed directly at the sun, at a 90° orientation:

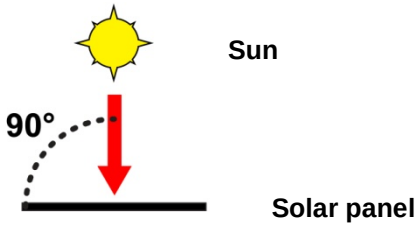

The closer to a 90° orientation between the panel and the sun, the higher the efficiency.

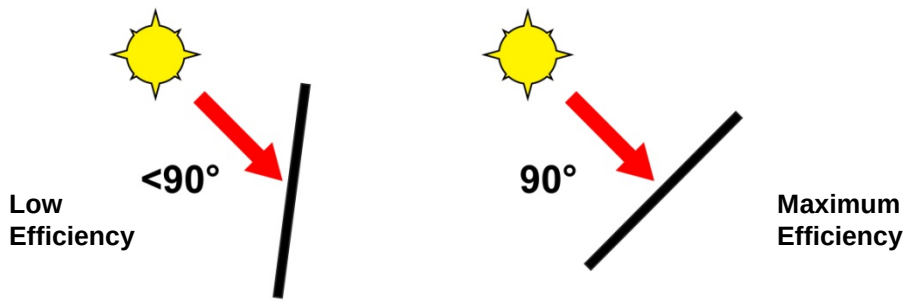

5.3.3 Maximizing Total Yearly Energy Production

The SolarPak's tilt angle should be set to the latitude of the location in order to maximize yearly energy production.

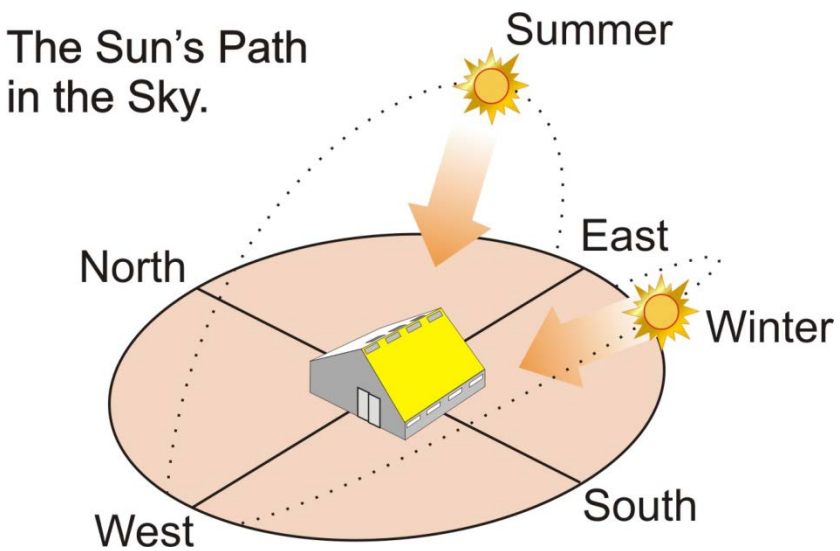

For example: San Jose, California, is at 37° latitude and -121° longitude. To maximize the yearly energy production, the SolarPak panel should be tilted to 37° from horizontal.

However, it is often preferable to design the system to operate in worst-case conditions. For solar panels, these are often in the winter months, due to shorter days, increased cloudiness, and the sun's lower position in the sky.

5.3.4 Maximizing Energy Production In The Winter

To maximize energy production in the winter, the best tilt angle is the latitude plus 15° in the Northern Hemisphere (or, minus 15° in the Southern Hemisphere).

For example: San Jose, California, is at 37° latitude and -121° longitude. To maximize the winter production, the SolarPak panel should be tilted to 52° (37 + 15) from horizontal.

5.3.5 Maximizing Energy Production In The Summer

The best tilt angle for summer is the latitude minus 15° in the Northern Hemisphere (or, plus 15° in the Southern Hemisphere).

Also, note that the tilt angle of the SolarPak is easy to adjust. You can easily change the tilt angle several times per year to maximize energy production at all times.

5.3.6 System Run Time

Several factors such as daylight hours, ambient temperature, and alarm conditions affect the overall run time of a SolarPak system.

To calculate the expected run time of your SolarPak system, you will need the following information:

1. Expected PowerPak run time without solar charger
2. Expected daily consumption (% of PowerPak consumption per day)
3. Expected daily production (% of PowerPak charge per day)

5.3.7 RAE PowerPak Run Time Without A Solar Charger

Several factors affect the run time of the RAE PowerPak, most notably transmission mode, ambient temperature, and alarm conditions. Use the table below as a baseline for determining expected run time of the PowerPak without solar.

Product	Mode	Battery	Run time at 55° C (131° F)	Run time at 20° C (68° F)	Run time at 0° C (32° F)	Run time at -20° C (-4° F)	Run time at -40° C (-40° F)
MeshGuard EC	STD	PowerPak	5 months	15 months	13 months	5 months	3 months
	RTR	PowerPak	30 days	45 days	40 days	30 days	10 days
MeshGuard LEL	STD	PowerPak	15 days	21 days	19 days	15 days	10 days
	RTR	PowerPak	13 days	20 days	18 days	13 days	7 days
Router	RTR	PowerPak	30 days	45 days	40 days	30 days	10 days
EchoView	RTR	PowerPak	30 days	45 days	40 days	30 days	10 days

5.3.8 Expected Daily Consumption

The previous chart has been converted to the percentage of battery consumed per day:

Product	Mode	Battery	% battery per day at 55° C (131° F)	% battery per day at 20° C (68° F)	% battery per day at 0° C (32° F)	% battery per day at -20° C (-4° F)	% battery per day at -40° C (-40° F)
MeshGuard EC	STD	PowerPak	0.7%	0.2%	0.3%	0.7%	0.9%
	RTR	PowerPak	3.3%	2.2%	2.5%	3.3%	10.0%
MeshGuard LEL	STD	PowerPak	6.7%	4.8%	5.3%	6.7%	10.0%
	RTR	PowerPak	7.7%	5.0%	5.6%	7.7%	14.3%
Router	RTR	PowerPak	3.3%	2.2%	2.5%	3.3%	10.0%
EchoView	RTR	PowerPak	3.3%	2.2%	2.5%	3.3%	10.0%

5.3.9 Expected Daily Production

The amount of radiant solar energy falling on a surface is commonly measured in watts per square meter (W/m^2). This quantity varies according to location, season, time of day, and weather conditions. The radiant energy from the sun at its peak (around noon on a clear day) falling on an adjacent surface is about $1000W/m^2$. Naturally, it is not as powerful when it's lower in the sky, and in fact the amount of radiant energy changes throughout the day.

Insolation, commonly referred to as "peak sun hour," is a unit of measurement that normalizes the amount of solar energy reaching the earth at different locations and at different times of the year. Peak sun hours vary based on geographic location and weather.

For example, Los Angeles, California, gets approximately 15 hours of daylight in June. This is equivalent to 7.3 peak sun hours, based upon the latitude and weather conditions for Los Angeles.

In contrast, Anchorage, Alaska, gets approximately 20 hours of daylight in June. However, based on the latitude and weather, it is only equivalent to 5.6 peak sun hours.

For critical applications, where 24/7/365 operation is required, run time calculations should be based on the lowest monthly peak sun hour value.

5.3.10 U.S. Peak Sun Hours By Location

The following table provides 30-year monthly averages of peak sun hours for various locations in the United States. Major locations outside the United States are in the tables on the pages following this one.

State	City	Latitude	Longitude	Jan	Feb	Mar	Apr	May	Jun	Jul	Aug	Sep	Oct	Nov	Dec	Avg Summer Insolation	Avg Winter Insolation
AL	Birmingham	33' 34" N	86' 45" W	2.29	3.31	4.04	5.14	5.92	5.98	5.81	5.7	4.8	3.93	2.96	2.25	5.56	3.13
AK	Anchorage	61' 10" N	150' 1" W	0.21	0.76	1.68	3.12	3.98	4.58	4.25	3.16	1.98	0.98	0.37	0.12	3.51	0.69
AR	Little Rock	32' 25" N	94'44" W	2.36	3.39	4.01	5.32	5.71	6.19	6.15	5.85	5.25	4.17	2.95	2.25	5.75	3.19
AZ	Phoenix	33' 26" N	112' 1" W	3.25	4.41	5.17	6.76	7.42	7.7	6.99	6.11	6.02	4.44	3.52	2.75	6.83	3.92
CA	Los Angeles	34'N	118' W	3.09	4.25	5.09	6.58	7.29	7.62	7.45	6.72	6.11	4.42	3.43	2.72	6.96	3.83
CA	San Francisco	38' 31" N	121' 30" W	2.35	3.33	4.42	5.95	6.84	7.39	7.55	6.51	5.75	3.92	2.65	2.06	6.67	3.11
CO	Denver	39' 45" N	104' 52" W	2.25	3.2	4.32	5.61	6.11	6.71	6.5	5.86	5.47	4.01	2.59	1.98	6.04	3.06
CT	Hartford	41' 44" N	72' 39" W	1.7	2.43	3.48	4.07	5.14	5.58	5.38	5.04	4.13	2.91	1.81	1.42	4.89	2.29
DE	Dover	39' 8" N	75' 28" W	1.85	2.62	3.6	4.33	5.44	5.91	5.64	5.3	4.38	3.23	2.21	1.66	5.17	2.53
FL	Miami	25' 48" N	80' 16" W	3.72	4.61	5.42	6.4	6.61	6.29	6.26	6.08	5.47	4.84	3.96	3.46	6.19	4.34
GA	Atlanta	33' 39" N	84'26" W	2.31	3.37	4.08	5.2	6.02	6.01	5.81	5.59	4.76	3.95	2.98	2.33	5.57	3.17
HI	Honolulu	21' 20" N	157' 55" W	4.38	5.15	5.99	6.69	7.05	7.48	7.37	7.07	6.51	5.46	4.41	4.01	7.03	4.90
IA	Dubuque	42' 24" N	90' 42" W	1.64	2.58	3.34	4.57	5.54	6.06	5.81	5.26	4.33	3.03	1.72	1.35	5.26	2.28
ID	Boise	43' 34" N	116' 13" W	1.73	2.72	3.77	5.22	5.9	6.57	7.17	6.12	5.28	3.29	1.74	1.46	6.04	2.45
IN	Indianapolis	39' 44" N	86' 17" W	1.67	2.59	3.28	4.67	5.46	6.11	5.79	5.37	4.76	3.33	1.97	1.46	5.36	2.38
IL	Chicago	41' 53" N	87' 38" W	1.5	2.45	3.2	4.48	5.56	6.07	5.68	5.27	4.51	3.07	1.69	1.26	5.26	2.20
KS	Kansas City	39' 12" N	94' 36" W	2.06	2.89	3.62	4.92	5.58	6.17	6.21	5.59	4.9	3.49	2.2	1.75	5.56	2.67
KY	Louisville	38' 11" N	85' 44" W	1.71	2.65	3.32	4.73	5.38	6.08	5.79	5.35	4.8	3.42	2.1	1.56	5.36	2.46
LA	New Orleans	29' 37" N	90'5" W	2.64	3.73	4.67	5.8	6.6	6.15	6.09	5.7	5.13	4.48	3.49	2.68	5.91	3.62
MA	Boston	42' 22" N	71' 2" W	1.66	2.5	3.51	4.13	5.11	5.47	5.44	5.05	4.12	2.84	1.74	1.4	4.89	2.28
MD	Annapolis	38' 35" N	76' 21" W	1.96	2.8	3.71	4.55	5.54	6.03	5.77	5.34	4.48	3.4	2.37	1.81	5.29	2.68
ME	Portland	45' 36" N	122' 36" W	1.38	2.33	3.49	4.57	5.46	6.09	6.64	5.78	4.8	2.79	1.41	1.1	5.56	2.08
MI	Detroit	42' 25" N	83' 1" W	1.43	2.33	3.19	4.34	5.44	5.98	5.64	4.99	4.25	2.73	1.52	1.14	5.11	2.06
MO	St. Louis	38' 45" N	90' 23" W	2.02	2.82	3.52	4.97	5.56	6.21	6.05	5.63	4.91	3.55	2.21	1.73	5.56	2.64
MN	Minneapolis	44' 53" N	93' 13" W	1.6	2.61	3.3	4.55	5.44	5.86	5.77	5.12	4.12	2.9	1.62	1.34	5.14	2.23
MS	Jackson	42' 16" N	84' 28" W	1.47	2.41	3.22	4.33	5.46	5.93	5.57	4.99	4.3	2.78	1.55	1.17	5.10	2.10
MT	Billings	45' 48" N	108' 32" W	1.55	2.57	3.52	4.82	5.63	6.45	6.39	5.75	4.67	3.19	1.77	1.3	5.62	2.32
MT	Great Falls	43' 33" N	96'42" W	1.3	2.36	3.41	4.84	5.56	6.18	6.44	5.53	4.4	2.9	1.53	1.11	5.49	2.10
NC	Charlotte	35'13"N	80'56" W	2.22	3.17	3.95	4.98	5.8	6.01	5.76	5.27	4.58	3.75	2.76	2.21	5.40	3.01
NO	Fargo	46' 54" N	96'48" W	1.44	2.39	3.36	4.79	5.62	5.82	5.94	5.14	4.01	2.83	1.59	1.31	5.22	2.15
NE	Omaha	41' 18" N	95' 54" W	1.92	2.76	3.45	4.74	5.6	6.14	6.11	5.46	4.74	3.34	2	1.57	5.47	2.51
NH	Manchester	42' 56" N	71' 26" W	1.66	2.5	3.51	4.13	5.11	5.47	5.44	5.05	4.12	2.84	1.74	1.4	4.89	2.28
NJ	Trenton	40'13"N	74' 46" W	1.71	2.39	3.43	4.04	5.26	5.67	5.39	5.14	4.18	3	1.98	1.48	4.95	2.33
NM	Albuquerque	35' 3" N	106' 37" W	2.92	3.97	4.92	6.3	6.68	6.94	6.66	5.8	5.68	4.18	3.16	2.5	6.34	3.61
NV	Las Vegas	36' 18"N	115' 16" W	3.02	4.13	5.05	6.57	7.25	7.69	7.37	6.42	6.08	4.26	3.18	2.6	6.90	3.71
NY	New York	41' N	74' W	1.67	2.37	3.41	3.93	5.11	5.48	5.26	5.01	4.05	2.85	1.82	1.4	4.81	2.25
OH	Columbus	39' 16" N	85' 54" W	1.64	2.57	3.26	4.63	5.4	608	5.73	5.29	4.74	3.29	1.96	1.45	5.31	2.36
OK	Tulsa	36' 12" N	95' 54" W	2.33	3.22	3.9	5.25	5.58	6.32	6.4	5.8	5.08	3.8	2.62	2.06	5.74	2.99
OR	Portland	45' 32" N	122' 40" W	1.38	2.33	3.49	4.57	5.46	6.09	6.64	5.78	4.8	2.79	1.41	1.1	5.56	2.08
PA	Philadelphia	39' 53" N	75' 15" W	1.85	2.62	3.6	4.33	5.44	5.91	5.64	5.3	4.38	3.23	2.21	1.66	5.17	2.53
PA	Pittsburgh	40' 27" N	79' 57" W	1.59	2.4	3.26	4.07	5.05	5.53	5.27	4.94	4.05	2.88	1.86	1.41	4.82	2.23
RI	Providence	41' 44" N	71' 26" W	1.7	2.46	3.53	4.2	5.17	5.67	5.48	5.08	4.21	2.97	1.8	1.43	4.97	2.32
SC	Columbia	38' 58" N	92' 22" W	2.14	2.91	3.62	5.03	5.56	6.22	6.13	5.64	4.95	3.57	2.25	1.82	5.59	2.72
SD	Sioux Falls	45' 27" N	98' 25" W	1.72	2.71	3.31	4.65	5.61	6.1	6.04	5.42	4.47	3.2	1.78	1.43	5.38	2.36
TN	Nashville	36' 7" N	86' 41" W	1.94	2.9	3.54	4.76	5.57	5.9	5.86	5.62	4.63	3.53	2.45	1.82	5.39	2.70
TX	San Antonio	29' 32" N	98' 28" W	2.57	3.7	4.43	5.54	5.94	6.62	6.49	6.28	5.7	4.67	3.43	2.62	6.10	3.57
TX	Houston	29' 59" N	95' 22" W	2.47	3.5	4.4	5.59	6.03	6.45	6.36	6.07	5.46	4.61	3.3	2.44	5.99	3.45
UT	Salt Lake City	40' 46" N	111' 52" W	2.23	3.15	4.09	5.57	6.26	6.98	6.86	5.98	5.39	3.68	2.29	1.97	6.17	2.90
VA	Washington	38' 51" N	77' 2" W	1.95	2.8	3.66	4.46	5.42	5.88	5.63	5.22	4.38	3.36	2.34	1.79	5.17	2.65
VT	Montpelier	44' 16" N	72' 35" W	1.58	2.54	3.5	4.05	5	5.24	5.37	4.92	3.79	2.46	1.52	1.28	4.73	2.15
WA	Seattle	47' 32" N	122' 18" W	1.14	2.04	3.23	4.26	5.19	5.75	6.27	5.46	4.43	2.5	1.21	0.9	5.23	1.84
WI	Milwaukee	42' 57" N	87' 54" W	1.43	2.41	3.29	4.48	5.6	6.09	5.74	5.21	4.34	2.9	1.6	1.2	5.24	2.14
WV	Charleston	38' 22" N	81' 36" W	1.75	2.64	3.34	4.26	5.2	5.67	5.49	5.19	4.26	3.19	2.15	1.62	5.01	2.45

Note: The SolarPak charges 1.5% of the battery per peak sun hour.

For example, the average winter insolation value for Pittsburgh, Pennsylvania, is 2.23. This means that SolarPak will charge 2.23 x 1.5%, or 3.35% per day. Calculations assume optimum tilt and orientation, as described in section 5.3.3 of this guide.

5.3.11 International Peak Sun Hours By Location

The following table provides 30-year monthly averages of peak sun hours for various locations regions around the world, outside of the United States. For other locations outside the United States, a web search for "peak sun hours" or "insolation levels" followed by the name of the city will give the best results. One potential website with this information is http://www.gaisma.com.

Country	City	Latitude	Longitude	Jan	Feb	Mar	Apr	May	Jun	Jul	Aug	Sep	Oct	Nov	Dec	Avg Summer Insolation	Avg Winter Insolation
Albania	Tirana	41°19'48"N	19°49'12"E	1.82	2.45	3.58	4.35	5.66	6.64	6.87	6.03	4.35	2.9	1.87	1.51	5.65	2.36
Albania	Durrës	41°19'48"N	19°27'00"E	1.84	2.62	3.92	5.2	6.63	7.59	7.69	6.69	4.95	3.17	2.01	1.56	6.46	2.52
Andorra	Andorra la Vella	42°30'36"N	1°30'36"E	1.35	2.2	3.46	4.22	5.22	5.74	6.05	5.29	4.09	2.51	1.49	1.16	5.10	2.03
Andorra	Escaldes-Engordany	42°30'00"N	1°31'48"E	1.6	2.56	3.73	4.37	5.05	5.68	6.01	5.23	4.18	2.76	1.83	1.42	5.09	2.32
Australia	Sydney	33°52'12"S	151°12'36"E	5.82	5.06	4.34	3.38	2.62	2.38	2.54	3.33	4.32	5.25	5.71	6.12	3.10	5.38
Australia	Melbourne	37°48'36"S	144°57'36"E	6.15	5.65	4.34	3.07	2.12	1.66	1.81	2.52	3.4	4.6	5.63	6.07	2.43	5.41
Australia	Brisbane	27°27'36"S	153°01'12"E	6.64	5.79	5.27	4.18	3.4	3.23	3.47	4.29	5.47	5.97	6.56	6.8	4.01	6.17
Australia	Perth	31°57'36"S	115°50'24"E	7.5	6.59	5.25	3.86	2.86	2.43	2.53	3.26	4.41	5.88	6.94	7.6	3.23	6.63
Austria	Vienna	48°13'12"N	16°22'12"E	1.07	1.9	2.84	4.14	5.16	5.26	5.3	4.81	3.3	1.96	1.12	0.85	4.66	1.62
Austria	Graz	47°04'48"N	15°25'12"E	1.28	2.11	3.05	3.95	4.71	4.7	4.84	4.38	3.21	2.06	1.33	1.04	4.30	1.81
Belarus	Minsk	53°54'36"N	27°33'00"E	0.75	1.52	2.6	3.68	4.7	4.75	4.71	4.11	2.62	1.44	0.78	0.53	4.10	1.27
Belarus	Homel'	52°25'48"N	30°59'24"E	0.93	1.65	2.75	3.8	4.97	5.08	5.03	4.4	2.87	1.7	0.91	0.69	4.36	1.44
Belgium	Brussels	50°49'48"N	4°19'48"E	0.74	1.37	2.46	3.72	4.77	4.89	4.85	4.24	2.84	1.67	0.86	0.55	4.22	1.28
Belgium	Antwerp	51°13'12"N	4°25'12"E	0.74	1.37	2.46	3.72	4.77	4.89	4.85	4.24	2.84	1.67	0.86	0.55	4.22	1.28
Bosnia and Herzegovina	Sarajevo	43°51'00"N	18°22'48"E	1.41	2.16	3.12	3.94	4.97	5.55	5.84	5.21	3.69	2.35	1.42	1.16	4.87	1.94
Brazil	São Paulo	23°31'48"S	46°37'48"W	5.26	5.06	4.78	4.34	3.53	3.4	3.6	4.34	4.49	5.03	5.46	5.33	3.95	5.15
Brazil	Rio de Janeiro	22°54'36"S	43°12'00"W	5.31	5.4	4.87	4.25	3.45	3.42	3.43	4.02	4.02	4.55	4.93	4.99	3.77	5.01
Brazil	Salvador	12°58'12"S	38°30'00"W	6.27	6.26	5.77	5.1	4.58	4.21	4.5	4.84	5.42	6.03	5.95	6.11	4.78	6.07
Brazil	Fortaleza	3°46'48"S	38°35'24"W	5.77	5.58	4.98	4.74	5.18	5.29	5.73	6.4	6.66	6.76	6.49	6.22	5.67	5.97
Brazil	Belo Horizonte	19°55'12"S	43°56'24"W	5.49	5.71	5.3	4.9	4.35	4.22	4.38	5.01	5.34	5.46	5.22	5.11	4.70	5.38
Bulgaria	Sofia	42°41'24"N	23°18'36"E	1.59	2.27	3.25	4.25	5.43	6.11	6.27	5.58	4.05	2.55	1.58	1.29	5.28	2.09
Canada	Calgary	51°03'00"N	114°03'36"W	0.99	1.79	3	4.51	5.25	5.58	5.85	4.85	3.4	2.16	1.21	0.82	4.91	1.66
China	Shanghai	31°13'48"N	121°28'12"E	2.61	3.08	3.54	4.46	5.05	4.64	5.15	4.82	4.09	3.47	2.91	2.56	4.70	3.03
China	Beijing	39°55'48"N	116°24'00"E	2.51	3.34	4.29	5.42	6.09	6	5.29	4.85	4.34	3.43	2.61	2.21	5.33	3.07
China	Chongqing	29°34'12"N	106°34'48"E	1.83	2.16	2.87	3.65	4.12	4.05	4.73	4.62	3.34	2.36	1.99	1.64	4.09	2.14
China	Xian	34°16'12"N	108°54'00"E	2.66	3.2	3.68	4.79	5.41	5.38	5.26	4.88	3.77	3.04	2.59	2.41	4.92	2.93
Croatia	Zagreb	45°48'00"N	15°58'12"E	1.27	2.2	3.19	4.21	5.32	5.57	5.74	5.14	3.63	2.22	1.36	1.05	4.94	1.88
Czech Republic	Prague	50°04'48"N	14°25'48"E	0.87	1.61	2.53	3.83	4.8	4.81	4.92	4.45	2.92	1.7	0.88	0.68	4.29	1.38
Denmark	Copenhagen	55°40'12"N	12°34'48"E	0.49	1.16	2.34	3.85	5.19	5.43	5.31	4.41	2.86	1.47	0.75	0.39	4.51	1.10
Denmark	Århus	56°09'00"N	10°13'12"E	0.5	1.17	2.43	3.97	5.34	5.55	5.48	4.49	2.94	1.56	0.74	0.4	4.63	1.13
Estonia	Tallinn	59°26'24"N	24°44'24"E	0.32	1.04	2.3	3.99	5.5	5.77	5.52	4.39	2.71	1.29	0.51	0.21	4.65	0.95
Egypt	Cairo	30°03'36"N	31°15'00"E	2.99	3.71	4.9	6.26	7.02	7.73	7.52	6.91	5.79	4.41	3.34	2.84	6.87	3.70
Egypt	Alexandria	31°13'12"N	29°57'00"E	2.76	3.68	5.04	6.43	7.4	8.04	7.89	7.15	6.01	4.57	3.28	2.64	7.15	3.66
Faroe Islands	Tórshavn	62°01'48"N	6°48'00"W	0.16	0.66	1.67	3.12	4.49	4.75	4.23	3.56	2.2	1.02	0.29	0.07	3.73	0.65
Finland	Helsinki	60°10'12"N	24°56'24"E	0.28	0.99	2.23	3.83	5.14	5.37	5.17	3.98	2.47	1.12	0.46	0.16	4.33	0.87
Finland	Espoo	60°12'36"N	24°39'36"E	0.28	0.99	2.23	3.83	5.14	5.37	5.17	3.98	2.47	1.12	0.46	0.16	4.33	0.87
France	Paris	48°51'36"N	2°20'24"E	0.85	1.53	2.63	3.76	4.83	5.09	5.13	4.47	3.13	1.88	1.04	0.65	4.40	1.43
France	Marseille	43°18'36"N	5°22'12"E	1.65	2.63	4.05	4.96	6	6.81	6.77	5.79	4.42	2.73	1.84	1.38	5.79	2.38
France	Lyon	45°45'36"N	4°49'48"E	1.15	1.98	3.29	4.16	5	5.56	5.84	5.03	3.66	2.18	1.3	0.94	4.88	1.81
Germany	Berlin	52°31'12"N	13°22'48"E	0.62	1.21	2.28	3.65	4.79	4.77	4.81	4.14	2.74	1.51	0.73	0.48	4.15	1.14
Germany	Hamburg	53°33'00"N	10°00'00"E	0.5	1.14	2.3	3.68	4.83	4.8	4.9	4.16	2.72	1.46	0.68	0.39	4.18	1.08
Germany	Munich	48°08'24"N	11°34'48"E	1.1	1.93	2.9	4.16	5.13	5.15	5.26	4.69	3.25	1.94	1.12	0.86	4.61	1.64
Gibraltar	Gibraltar	36°08'24"N	5°21'00"W	2.33	3.25	4.49	5.48	6.24	7.3	7.52	6.75	5.26	3.6	2.51	2	6.43	3.03
Greece	Athens	37°58'48"N	23°43'48"E	1.83	2.56	3.68	5.36	6.78	7.91	7.83	6.98	5.35	3.32	2.06	1.57	6.70	2.50
Greece	Thessaloníki	40°38'24"N	22°56'24"E	1.8	2.46	3.45	4.32	5.35	6.27	6.46	5.67	4.29	2.79	1.81	1.48	5.39	2.30
Guernsey	Saint Peter Port	49°28'12"N	2°33'00"W	0.9	1.7	2.94	4.55	5.85	6.23	6.05	5.15	3.86	2.16	1.17	0.7	5.28	1.60
Hungary	Budapest	47°30'36"N	19°04'48"E	1.07	1.86	2.81	3.99	4.95	5.19	5.28	4.77	3.23	1.95	1.12	0.86	4.57	1.61
Iceland	Reykjavík	64°08'24"N	21°55'12"W	0.11	0.53	1.31	2.77	4.11	4.71	4.16	3.27	2.17	0.97	0.25	0.03	3.53	0.53
Ireland	Dublin	53°19'48"N	6°15'00"W	0.63	1.31	2.46	3.91	5.12	5.22	5.02	4.28	3.09	1.72	0.79	0.47	4.44	1.23
Ireland	Cork	51°54'00"N	8°28'12"W	0.67	1.13	2.06	3.37	4.34	4.49	4.37	3.71	2.66	1.47	0.79	0.5	3.82	1.10
Isle of Man	Douglas	54°09'00"N	4°28'48"W	0.53	1.03	1.95	3.06	4.23	4.36	4.28	3.45	2.41	1.22	0.59	0.41	3.63	0.96
Italy	Rome	41°53'24"N	12°30'00"E	1.61	2.49	3.68	4.57	5.77	6.41	6.73	5.94	4.33	2.75	1.7	1.36	5.63	2.27
Italy	Milan	45°28'48"N	9°11'24"E	1.48	2.43	3.68	4.28	5.05	5.79	5.98	5.2	3.83	2.37	1.56	1.21	5.02	2.12
Jersey	Helier	49°11'24"N	2°06'36"W	0.99	1.77	2.83	4.23	5.43	5.84	5.69	4.89	3.46	1.92	1.09	0.79	4.92	1.57
Kazakhstan	Almaty	43°19'12"N	76°55'12"E	1.59	2.41	3.4	4.56	5.36	5.99	5.91	5.57	4.52	3.04	1.94	1.35	5.32	2.29
Kazakhstan	Shymkent	42°19'12"N	69°35'24"E	1.61	2.22	3.43	4.78	6.18	7	6.95	6.19	4.85	3.2	1.99	1.36	5.99	2.30
Kazakhstan	Qaragandy	49°52'48"N	73°09'36"E	1.12	1.92	3.38	4.79	5.85	6.47	6.05	5.3	3.82	2.26	1.3	0.93	5.38	1.82
Latvia	Riga	56°58'12"N	24°07'48"E	0.53	1.15	2.39	3.95	5.33	5.56	5.36	4.39	2.75	1.4	0.68	0.35	4.56	1.08
Liechtenstein	Schaan	47°10'12"N	9°30'36"E	1.29	2.11	3.12	4.03	4.9	5	5.11	4.48	3.33	2.23	1.36	1.03	4.48	1.86
Lithuania	Vilnius	54°42'00"N	25°16'12"E	0.67	1.32	2.48	3.85	5.11	5.24	5.14	4.38	2.77	1.5	0.8	0.51	4.42	1.21
Luxembourg	Luxemburg	49°37'12"N	6°07'12"E	0.79	1.51	2.48	3.69	4.61	4.84	4.85	4.28	2.88	1.7	0.9	0.61	4.19	1.33

Macedonia	Skopje	42°00'00"N	21°28'12"E	1.66	2.35	3.34	4.14	5.18	6.06	6.3	5.55	4.04	2.66	1.68	1.35	5.21	2.17
Malta	Birkirkara	35°54'00"N	14°28'12"E	2.59	3.61	4.9	6.26	7.35	7.99	8.11	7.27	5.63	4.14	2.83	2.23	7.10	3.38
Moldova	Chişinău	47°01'48"N	28°49'48"E	1.17	1.93	2.94	4.07	5.43	5.72	5.74	5.12	3.55	2.25	1.22	0.92	4.94	1.74
Monaco	Monte Carlo	43°45'00"N	7°25'12"E	1.46	2.32	3.38	3.86	4.69	5.65	5.97	5.13	3.99	2.51	1.68	1.22	4.88	2.10
Montenegro	Podgorica	42°28'12"N	19°16'48"E	1.6	2.26	3.33	4.08	5.22	6.16	6.49	5.7	4.08	2.66	1.65	1.36	5.29	2.14
Netherlands	Amsterdam	52°22'12"N	4°53'24"E	0.68	1.41	2.55	4.07	5.36	5.53	5.44	4.59	2.95	1.64	0.78	0.49	4.66	1.26
Norway	Oslo	59°54'36"N	10°45'00"E	0.28	0.94	2.2	3.57	5.09	5.31	5.14	3.99	2.54	1.24	0.47	0.17	4.27	0.88
Oman	as-Sīb	23°40'12"N	58°11'24"E	4.37	5.22	5.92	7.15	7.93	7.91	7.19	6.93	6.73	6	4.88	4.19	7.31	5.10
Oman	Bawšar	23°31'48"N	58°23'24"E	4.37	5.22	5.92	7.15	7.93	7.91	7.19	6.93	6.73	6	4.88	4.19	7.31	5.10
Poland	Warsaw	52°15'36"N	21°01'12"E	0.87	1.54	2.55	3.72	4.97	4.77	4.83	4.39	2.8	1.62	0.92	0.67	4.25	1.36
Poland	Cracow	50°03'36"N	19°57'36"E	0.93	1.63	2.65	3.78	4.92	4.89	4.93	4.49	2.94	1.74	0.94	0.71	4.33	1.43
Portugal	Lisbon	38°43'12"N	9°08'24"W	1.91	2.74	4.05	5.09	5.82	6.58	6.59	6.02	4.65	3.14	2.06	1.62	5.79	2.59
Qatar	Doha	25°18'00"N	51°30'36"E	4.04	4.95	5.48	6.6	7.59	8.01	7.53	7.31	6.77	5.75	4.62	3.79	7.30	4.77
Qatar	ar-Rayyān	25°19'12"N	51°22'12"E	3.26	4.23	4.95	5.9	7.02	7.44	7.23	6.71	5.96	4.78	3.69	3.05	6.71	3.99
Romania	Bucharest	44°26'24"N	26°06'00"E	1.5	2.19	3.22	4.29	5.57	6.05	6.14	5.49	3.95	2.53	1.56	1.18	5.25	2.03
Russia	Moscow	55°45'00"N	37°37'12"E	0.61	1.33	2.57	3.91	5.13	5.42	5.31	4.16	2.63	1.49	0.74	0.43	4.43	1.20
Russia	Saint Petersburg	59°55'48"N	30°19'12"E	0.29	0.96	2.14	3.79	5.29	5.68	5.49	4.27	2.55	1.21	0.47	0.16	4.51	0.87
San Marino	Serravalle	43°57'00"N	12°29'24"E	1.49	2.49	3.91	4.86	6.05	6.6	6.63	5.72	4.11	2.59	1.57	1.24	5.66	2.22
Saudi Arabia	Riyadh	24°39'00"N	46°46'12"E	3.5	4.58	5.41	6.12	7.06	7.65	7.5	7.12	6.48	5.37	3.97	3.25	6.99	4.35
Saudi Arabia	Jiddah	21°30'00"N	39°10'12"E	4.37	5.24	6.14	7.08	7.35	7.51	7.48	7.19	6.61	5.87	4.61	4.07	7.20	5.05
Serbia	Belgrade	44°49'48"N	20°30'00"E	1.31	2.15	3.27	4.36	5.46	5.95	6.03	5.41	3.8	2.49	1.46	1.1	5.17	1.96
Slovakia	Bratislava	48°09'36"N	17°07'48"E	1.07	1.9	2.84	4.14	5.16	5.26	5.3	4.81	3.3	1.96	1.12	0.85	4.66	1.62
Slovenia	Ljubljana	46°03'36"N	14°30'36"E	1.39	2.33	3.36	4.16	5.02	5.21	5.37	4.83	3.53	2.15	1.44	1.14	4.69	1.97
Spain	Madrid	40°25'12"N	3°42'36"W	1.79	2.75	4.06	4.88	5.68	6.75	6.89	5.97	4.63	2.98	1.96	1.51	5.80	2.51
Spain	Barcelona	41°24'00"N	2°10'12"E	1.87	2.9	4.14	5.06	5.78	6.44	6.6	5.69	4.43	3.01	1.99	1.6	5.67	2.59
Svalbard and Jan Mayen	Longyearbyen	78°12'36"N	15°36'36"E	0	0.01	0.48	1.6	3.68	4.5	4.46	2.87	1.09	0.13	0	0	3.03	0.10
Sweden	Stockholm	59°19'48"N	18°04'12"E	0.34	1.03	2.33	4.03	5.45	5.7	5.46	4.37	2.82	1.32	0.54	0.2	4.64	0.96
Sweden	Göteborg	57°43'12"N	12°00'36"E	0.38	0.98	2.12	3.57	5.04	5.23	5.21	4.16	2.73	1.29	0.58	0.26	4.32	0.94
Switzerland	Zurich	47°22'48"N	8°32'24"E	1.24	2.05	3.16	4.18	5.06	5.37	5.45	4.74	3.45	2.14	1.31	0.98	4.71	1.81
Ukraine	Kharkiv	49°58'48"N	36°13'12"E	1.12	1.98	2.97	3.77	5.03	5.44	5.5	4.63	3.16	1.93	1.13	0.84	4.59	1.66
United Arab Emirates	Dubai	25°16'12"N	55°19'48"E	3.9	4.79	5.31	6.36	7.27	7.4	6.94	6.7	6.21	5.39	4.32	3.67	6.81	4.56
United Arab Emirates	Sharjah	25°22'12"N	55°24'36"E	3.9	4.79	5.31	6.36	7.27	7.4	6.94	6.7	6.21	5.39	4.32	3.67	6.81	4.56
United Kingdom	London	51°31'12"N	0°06'00"W	0.64	1.25	2.33	3.54	4.59	4.86	4.83	4.13	2.81	1.66	0.82	0.49	4.13	1.20
United Kingdom	Birmingham	52°28'48"N	1°54'36"W	0.67	1.23	2.23	3.39	4.39	4.64	4.66	3.99	2.76	1.59	0.82	0.5	3.97	1.17
Vatican City	Vatican City	41°54'00"N	12°27'36"E	1.61	2.49	3.68	4.57	5.77	6.41	6.73	5.94	4.33	2.75	1.7	1.36	5.63	2.27

5.3.12 Calculating Expected Run Time

If your daily charge percentage is larger than your daily consumption percentage, the SolarPak system will run indefinitely, since it is producing more energy than you are consuming.

If your daily charge percentage is less than your daily consumption percentage, use the following formula to determine the worst-case scenario for the expected run time of your system.

$$\text{Minimum Number Of Days Of Battery Run Time With SolarPak} = \frac{100\%}{C\% - G\%}$$

Where:

C% = PowerPak % consumed per day

G% = PowerPak % generated per day

For example: In Pittsburgh, Pennsylvania, the PowerPak percentage consumed per day is 4.8% (from the expected daily consumption table on page 14). The average winter PowerPak percentage generated per day is 3.35%. This is calculated by using lowest monthly peak sun hours from the chart on page 13 (Pittsburgh's average winter insolation level is 2.23 peak sun hours) times the 1.5 % SolarPak charge per peak sun hour. 2.23 x 1.5% = 3.35%.

The minimum number of days of battery run time with SolarPak would be:

$$\frac{100\%}{4.8\% - 3.35\%}$$

Or 69 days.

It is important to note that 69 days of run time is an runtime based on the average winter insolation level. Individual months may vary based on seasonal weather and temperature. More specific run time values can be calculated using the same formula and by replacing the average winter insolation value with a monthly value.

Note: The above calculations are based on historical 30-year averages. Actual values vary from year to year. The power capacity value displayed on the PowerPak's LCD may vary with weather, temperature, and time of day.

6 Electrical Connections With FTB1000 RAE PowerPak

The cable from the SolarPak is very short, so a 5m (16') extension cable is included. Once all connections are made, any extra cable should be attached to the pole (or, in the case of a wall mounting, rolled neatly) and held with cable ties.

1. Press the end of the SolarPak's cable and the end of the extension cable together and twist until the connection is tight.
2. Connect the other end of the cable to the input on the bottom of the FTB1000 RAE PowerPak
3. Connect the MeshGuard's cable to the RAE PowerPak.

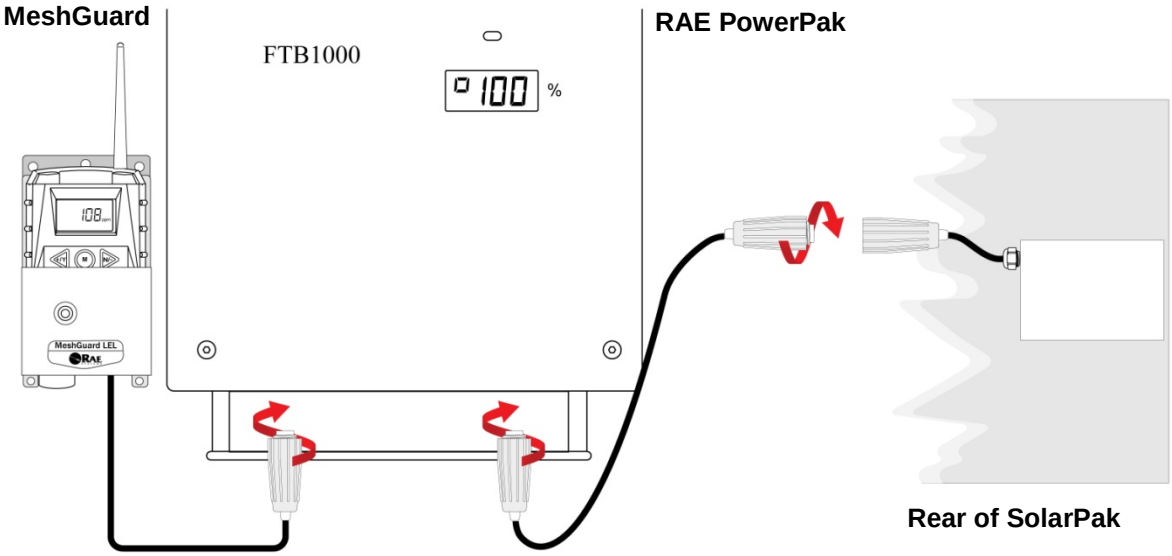

Make sure the cable connections are tight, in order to ensure proper contact and to keep contaminants and moisture out.

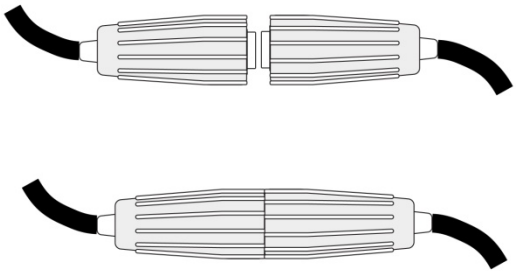

WARNING!
Do not modify the extension cable or increase its length beyond 5m (16').

Remove the cap from the connector on the bottom of the PowerPak, align the connectors, and then twist the cable's connector until the connection is snug.

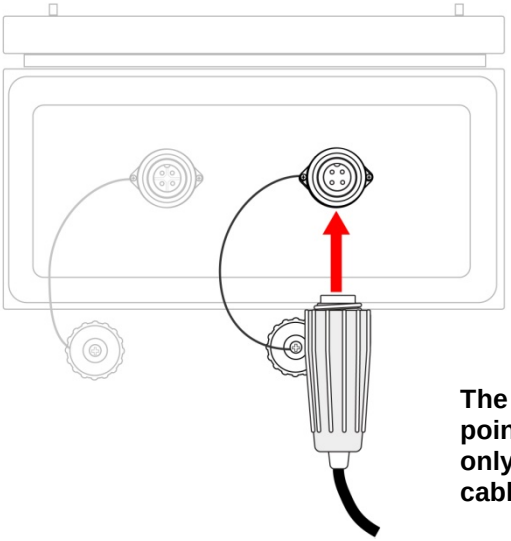

Once all connections are made, check them before starting and testing the system.

7 Starting & Testing The System

When all connections are made, the system is automatically on. Follow the start-up and calibration procedures outlined in the MeshGuard User's Guide, which comes with the MeshGuard monitor.

- When the SolarPak is placed outdoors in sunlight, the charge controller's Info LED should flash green (on and off in alternation), indicating that it is receiving power from the solar panel and is charging the batteries in the PowerPak.
- If the red Battery LED glows, then the battery is depleted and needs charging or replacement.

8 Disconnecting The SolarPak System

To disable the solar power system for servicing or relocation, disconnect the battery and solar panel connections. When the system is ready to be used again, reconnect them.

9 Troubleshooting

Problem	Possible Reasons & Solutions	
Battery does not charge or maintain a charge.	Reasons:	Solar panel set incorrectly. Defective/old batteries in PowerPak. Incorrect or loose cable connections.
	Solutions:	Check solar panel alignment. Charge or replace battery. Check cable connections.
MeshGuard is not receiving power.	Reasons:	Loose/damaged wire in cable to MeshGuard. Incorrect wiring polarity Damaged/defective charge controller.
	Solutions:	Tighten all wire connections or replace cord to MeshGuard. Check wiring polarity. Replace charge controller.
Charge controller Info LED or Battery LEDs do not glow	Reasons:	Incorrect or loose wiring. Battery is dead. Charge controller damaged/defective.
	Solutions:	Check that all wiring is correct. Check wiring polarity. Replace charge controller.

10 Replacement Parts

There are no user-serviceable parts in the SolarPak. If the unit is damaged or does not work, contact your Honeywell Analytics Representative or Honeywell Analytics Technical Support. Only the mounting hardware can be serviced.

10.1 LED Displays

The provided by Honeywell Analytics PowerPak has a single LED and an LCD that indicates charge, and in the case of errors any messages.

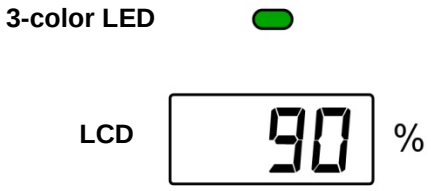

10.2 LED Status Indicator

The LED on the RAE PowerPak glows red, orange, or green, depending on different status alerts it is conveying.

Color	Indication	Related LCD Message
Green (blinking)	SolarPak supplying charge	Percentage of battery charge is shown
Green (Steady)	Battery (or batteries) fully charged.	LCD says "FULL"
Red	Battery (or batteries) charging via AC Adapter.	LCD says "CHRG" (charging)
Orange	Indicates an error. Check the LCD for more information.	LCD shows error code beginning with the letters "Er" followed by two digits indicating the type of error. Consult the RAE PowerPak User's Guide for an explanation of error codes.

10.3 LEDs And Troubleshooting

The green solar power LED on the left side of the charge controller should illuminate as soon as the charge controller receives power from the solar panel. When the controller starts to limit the charging current, this LED flashes. If this LED does not glow, it is likely an indication that the charge controller is not receiving current from the solar panel. Use a voltmeter to check the output from the solar panel.

The multi-color battery power LED on the right side of the charge controller can display 10 different colors (from red through yellow to green). The color indicates the battery voltage. Before the load is switched off, the LED blinks quickly. After the load is removed or switched off, the LED flashes slowly.

Find out more
www.honeywellanalytics.com

Contact Honeywell Analytics:

Europe, Middle East, Africa
Life Safety Distribution AG
Javastrasse 2
8604 Hegnau
Switzerland
Tel: +41 (0)44 943 4300
Fax: +41 (0)44 943 4398
gasdetection@honeywell.com

Customer Service:
Tel: +800 333 222 44 (Freephone number)
Tel: +41 44 943 4380 (Alternative number)
Fax: +800 333 222 55
Middle East Tel: +971 4 450 5800 (Fixed Gas Detection)
Middle East Tel: +971 4 450 5852 (Portable Gas Detection)
India Tel: +91 124 4752700

Americas
Honeywell Analytics Inc.
405 Barclay Blvd.
Lincolnshire, IL 60069
USA
Tel: +1 847 955 8200
Toll free: +1 800 538 0363
Fax: +1 847 955 8210
detectgas@honeywell.com

Asia Pacific
Honeywell Analytics Asia Pacific
#701 Kolon Science Valley (1)
43 Digital-Ro 34-Gil, Guro-Gu
Seoul 152-729
Korea
Tel: +82 (0)2 6909 0300
Fax: +82 (0)2 2025 0328
India Tel: +91 124 4752700
analytics.ap@honeywell.com

Technical Services
EMEAI: HAexpert@honeywell.com
US: ha.us.service@honeywell.com
AP: ha.ap.service@honeywell.com

www.honeywell.com

Please Note:
While every effort has been made to ensure accuracy in this publication, no responsibility can be accepted for errors or omissions. Data may change, as well as legislation and you are strongly advised to obtain copies of the most recently issued regulations, standards and guidelines. This publication is not intended to form the basis of a contract.

Honeywell

13429_REV A_01/2012
H_MAN0978_EMEAI
P/N F06-4001-000

© 2014 Honeywell Analytics

MANON

DETECTION | SAFETY | PROTECTION

For Pricing or Further
Information Please Contact Us.

+441158390495

www.manonglobal.com

sales@manonglobal.com

Leading UK Suppliers In
Gas Detection, Safety & Protection Products
Brand New & Genuine OEM Parts
UK & Worldwide Deliveries Available

Worldwide Delivery

1000+ Genuine Parts & Equipment

Please Note - The information, product designs & specifications in this document are subject to change without notice. Manon Global is not Responsible for determining the suitability of this product.